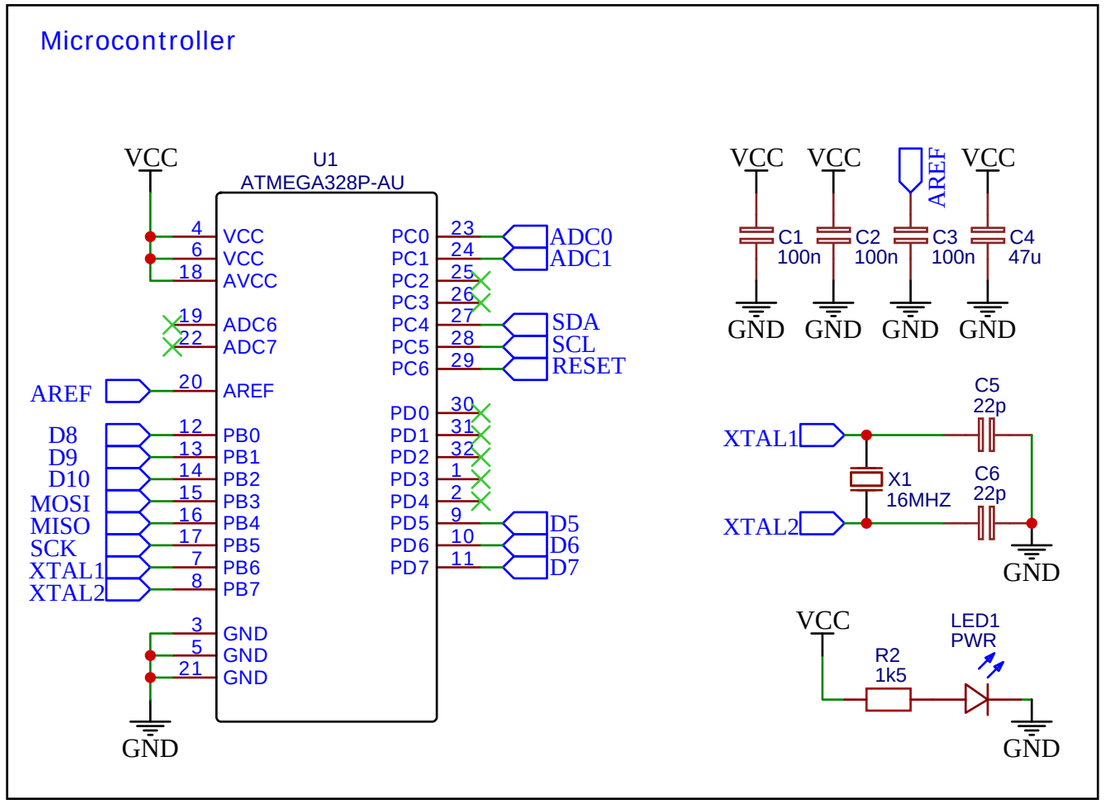

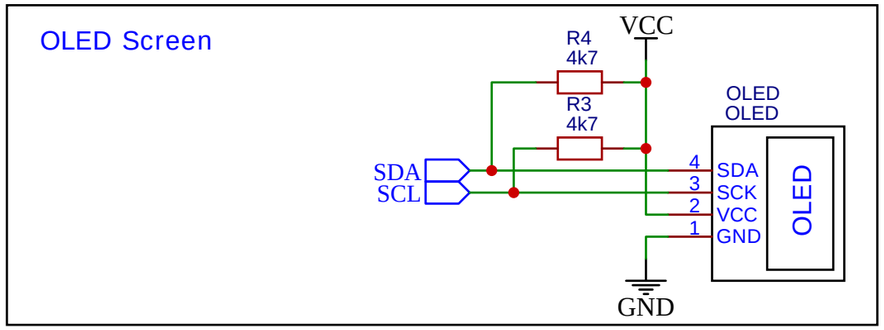

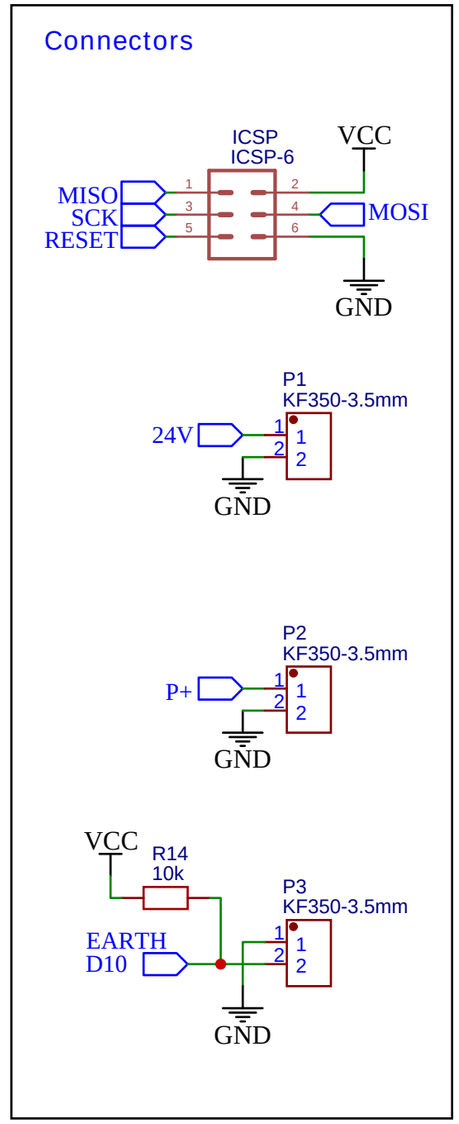

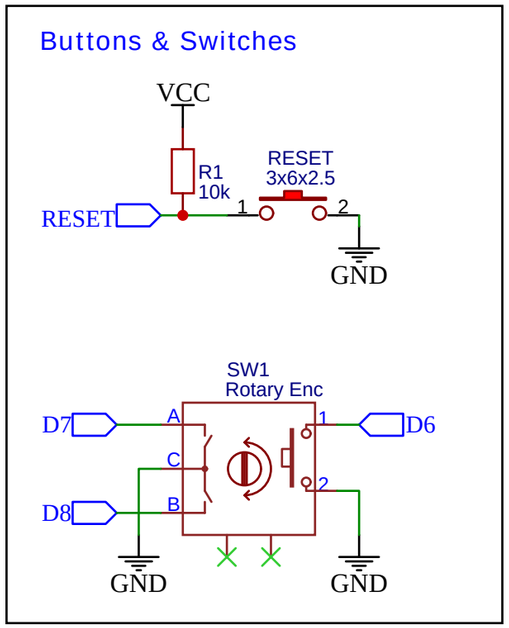

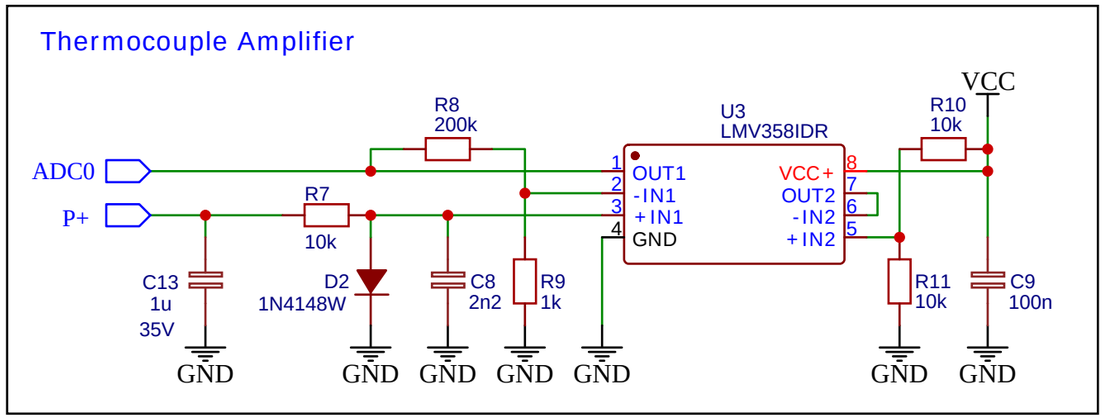

open source hardware
CC-BY-SA

The LMV358IDR can be replaced by an OPA2330AIDR which provides significantly more accurate and stable temperature measurements.

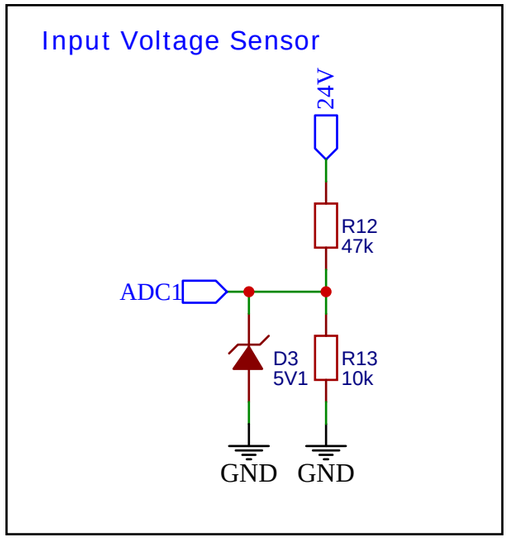

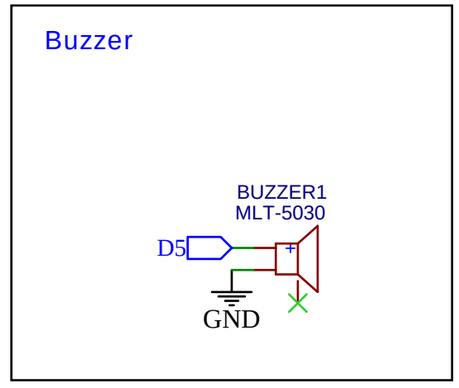

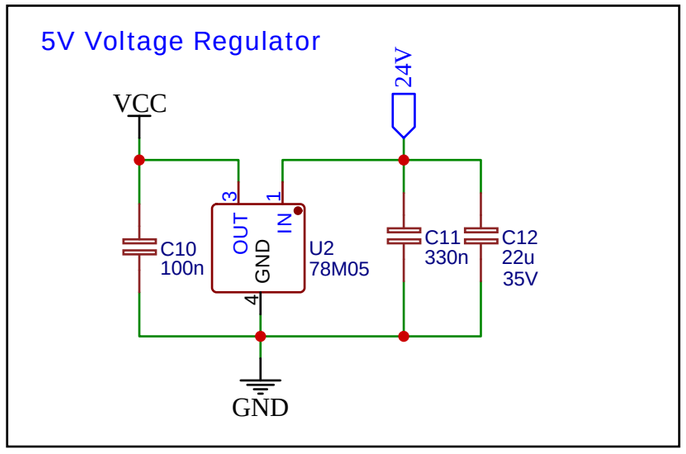

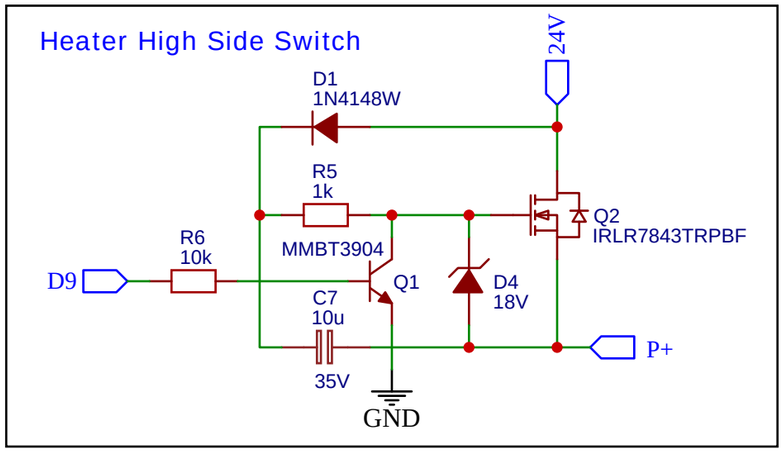

TITLE: T12 Soldering Station	REV: 2.5
Company: wagiminator	Sheet: 1/1
Date: 2019-06-08 Drawn By: Stefan Wagner	

EasyEDA